REXOD

RX536-H120SR

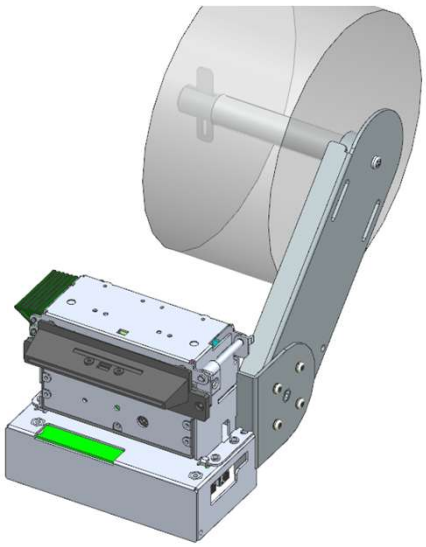

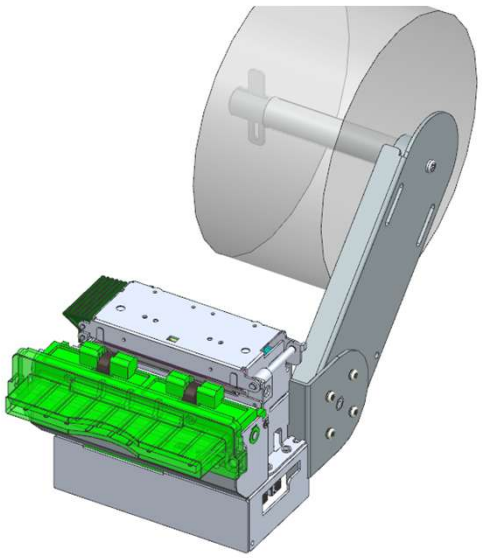

*** **OPTION :** Presenter + LED

Technical Specifications

1. Printer Characteristics

- **Printer Method**
  Line thermal printing
- **Printer Speed**
  200mm/s (MAX)
- **Printer Resolution**
  203dpi
- **Effective printer width (TPH)**
  54mm (432dot)
- **TPH life**
  100km (Max)
- **Cutting method**
  Command, Partial, Full
- **Feed method**
  Auto feeding
- **Printer Dimensions**
  Standard 251 x 118 x 150.6 (L x W x H)
  Presenter 251 x 118 x 150.6 (L x W x H)
- **Interface**
  USB, RS232

2. Paper roll parameters

- **Paper roll type**
  Thermal receipt paper
- **Paper width**
  60mm (MAX)
- **Paper roll diameters**
  150mm(MAX)
  ** Additional Option : 200mm(MAX)
- **Paper thickness**
  0.06~0.08 ㎛

3. Detection function

- **TPH temper**
  Temperature sensor
- **Cover opening detection**
  Detect switch
- **Cutter home point detection**
  Reflective photoelectric sensor
- **Paper near end detection**
  Reflective photoelectric sensor
- **Black mark detection**
  Reflective photoelectric sensor
- **Paper output detection (presenter)**
  Reflective photoelectric sensor

4. Power adaptor

- **Input**
  110-220V
- **Output**
  24V 1.7A DC±10%
- **Average current**
  1.7A (25% print ratio)
- **Peak current**
  8.5A (100% print ratio)

5. Reliabilty

- **Abrasion resistance**
  100km (MAX)
- **Pulse**
  100million
- **Cutter life**
  1,000,000 cuts

6. Character

- **Character requirements**
  ASCII 9X17, 12X24,
  Multilingual 24X24
- **Size**
  ASCII 9X17, 12x24dots, 24x24dots
- **Print font**
  Normal, 1-8 times height and width, reversed, underlined, italicized, bold
- **1D**
  UPC-A, UPC-E, EAN13, EAN8, CODE39, ITF, CODABAR, CODE93, CODE128
- **2D**
  QRCode, PDF417

7. Usage environment

- **Operating temperature**
  -5℃~50℃
- **Using humidity**
  20~80%RH
- **Storage temperature**
- -20℃~70℃
- **Electrostatic protection**
  Contact discharge 6KV,
  Air discharge 8K
- **Storage humidity**
  10-90%RH

REXOD

Diameters

1. RX536-H120SR

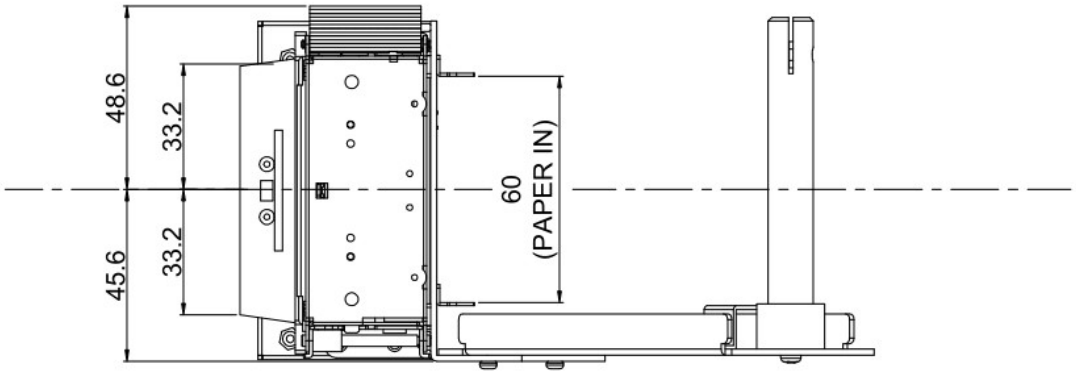

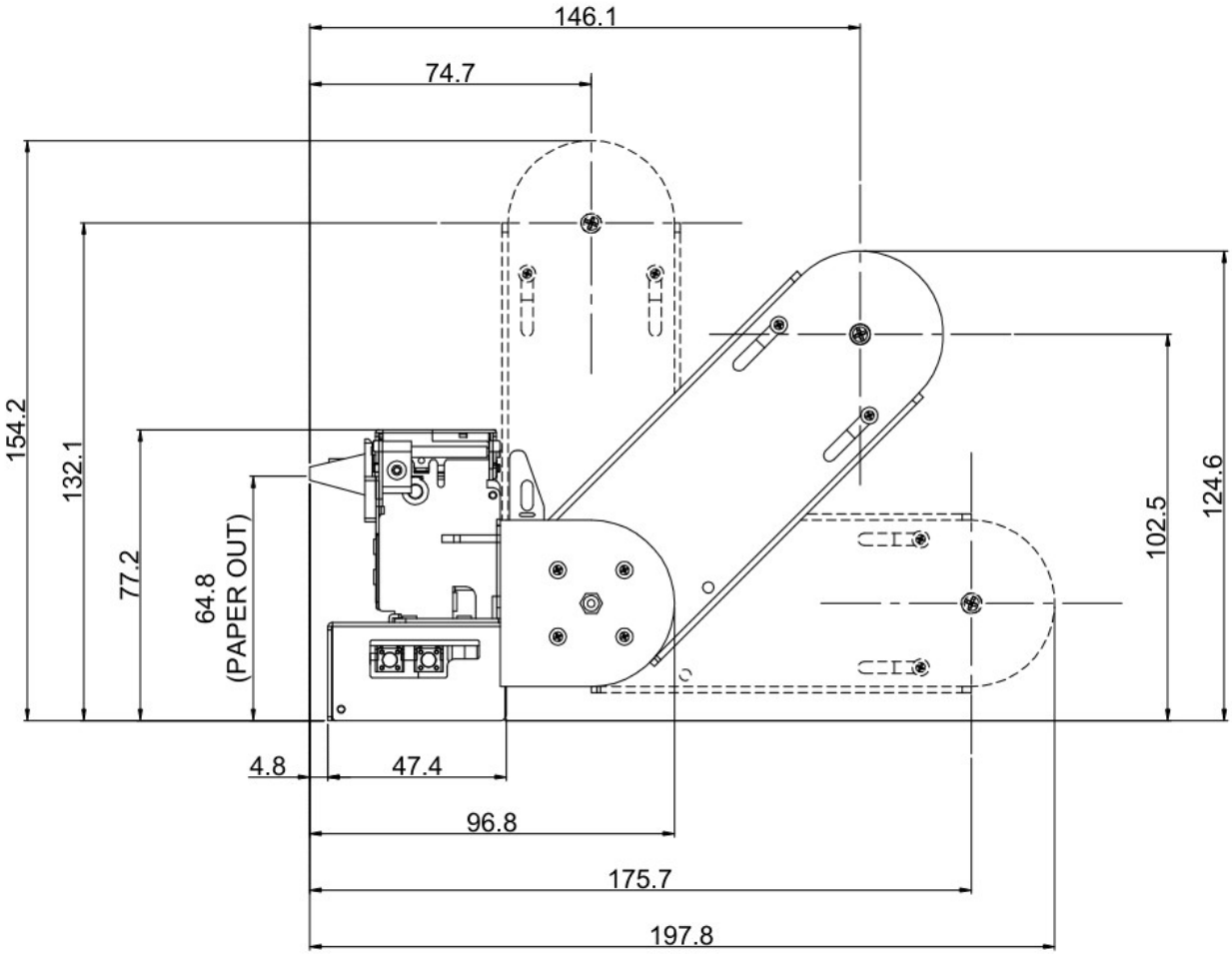

REXOD

Diameters

1. RX536-H120SR-PRM

