RX535-V00/ RX535-V00PRM2

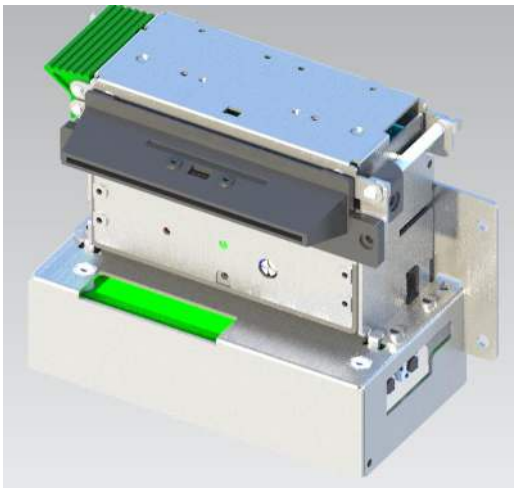

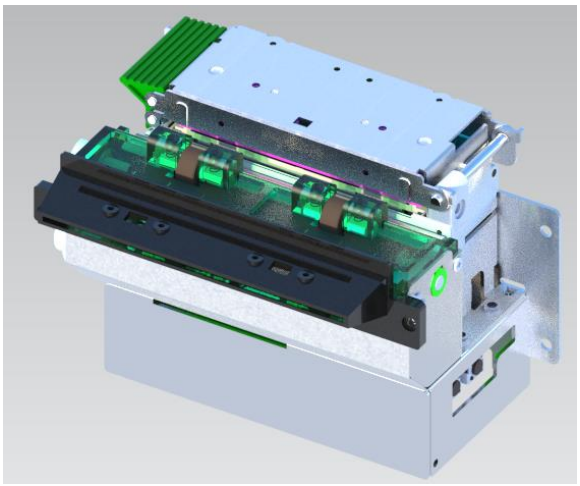

Technical Specifications

1. Printer Characteristics

- **Printer Method**
  Line thermal printing
- **Printer Speed**
  200mm/s
- **Printer Resolution**
  203dpi
- **Effective printer width (TPH)**
  54mm(432dot)
- **TPH life**
  100km
- **Cutting method**
  Partial / full (option)
- **Feed method**
  Auto feed
- **Printer Dimensions**
  NON-PR : 109.1 x 51 x 77.2 (W x L x H)
  PR : 109.1 x 77.4 x 77.2 (W x L x H)
- **Printer Weight**
  430g / 500g
- **Interface**
  USB+Serial

2. Paper roll parameters

- **Paper roll type**
  Thermal receipt paper
- **Paper width**
  59 ± 0.5 mm
- **Paper roll diameters**
- **Paper thickness**
  0.056~0.08mm [max 0.1]
  (Product Quality Warranty Scope)

3. Detection function

- **TPH temper**
  Temperature sensor
- **Cover opening detection**
  Detect switch
- **Cutter home point detection**
  Reflective photoelectric sensor
- **Paper near end detection**
  Reflective photoelectric sensor
- **Black mark detection**
  Reflective photoelectric sensor
- **Paper output detection**
  Reflective photoelectric sensor

4. Power adaptor

- **Input**
  220V
- **Output**
  12V 1.7A DC±10% (Option)
  24V 1.7A DC±10%
- **Average current**
  1.7A (25% print ratio)
- **Peak current**
  8.5A (100% print ratio)

5. Reliabilty

- **Abrasion resistance**
  200km (MAX)
- **Pulse**
  100million
- **Cutter life**
  1,000,000 cuts

6. Character

- **Character requirements**
  ASCII 9X17, 12X24,
  Multilingual 24X24
- **Size**
  ASCII 9X17, 12x24dots, 24x24dots
- **Print font**
  Normal, 1-8 times height and width, reversed, underlined, italicized, bold
- **1D**
  UPC-A, UPC-E, EAN13, EAN8, CODE39, ITF, CODABAR, CODE93, CODE128
- **2D**
  QRCode, PDF417

7. Usage environment

- **Operating temperature**
  0℃~50℃ (Product Quality Warranty Scope)
- **Using humidity**
  30~80%RH
- **Storage temperature**
- -20℃~70℃
- **Storage humidity**
  10-90%RH

8. Software

- **Drivers**
  - Windows / Linux/ Android

Diameters

1. RX535-V00

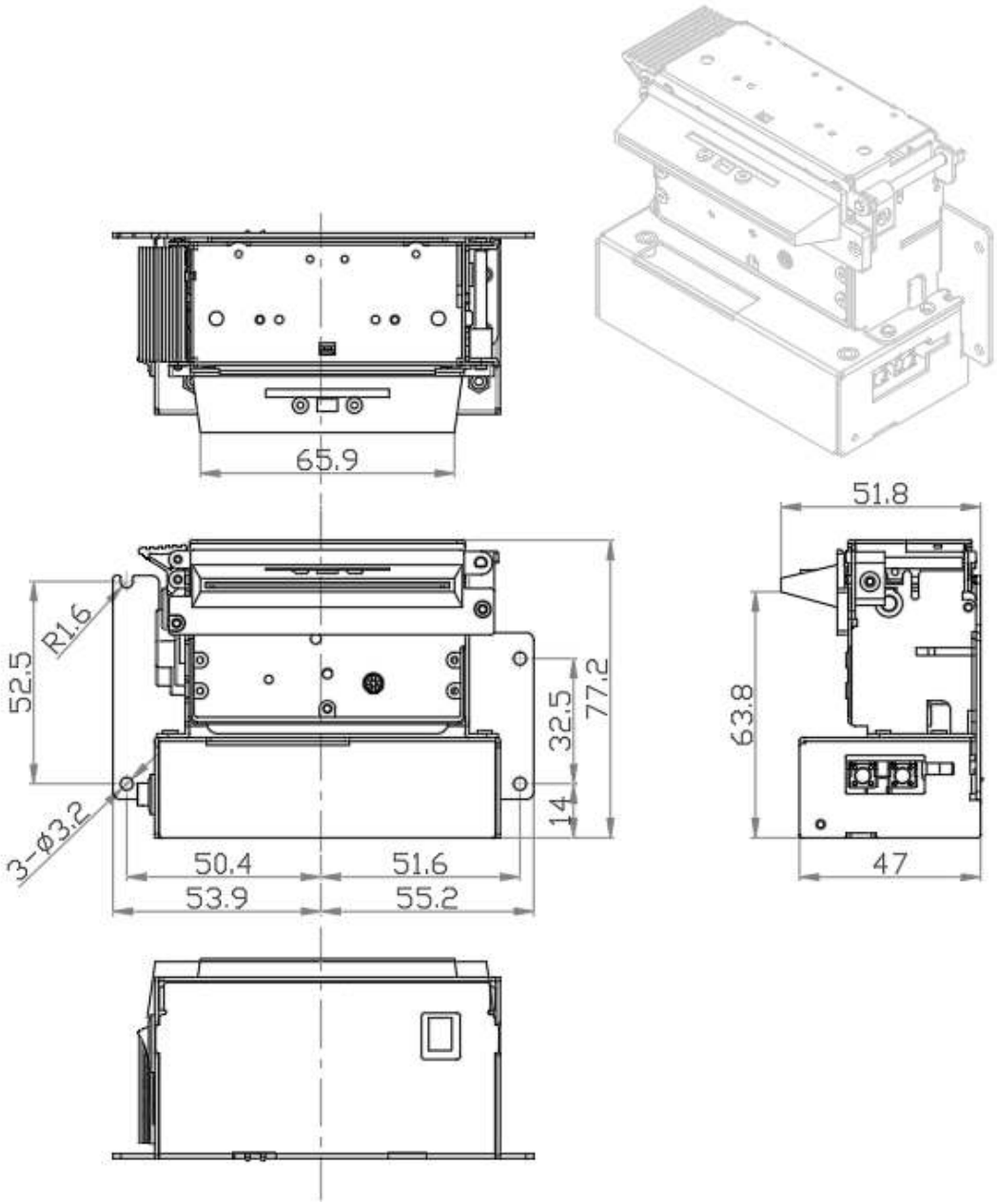

REXOD
www.rexod.net

REXOD CO., LTD
Tell : +86-769-8262-0704~7
Fax : +86-769-8262-0703

Office : 1616 Daeryung Techno Town 19Cha, 70, Gasan digital 2-ro ,Geumcheon-gu,Seoul 08589,Korea

Diameters

2. RX535-V00PRM2

